R6650

12” WIDE MODULAR TRENCH DRAIN WITH HEAVY DUTY GRATING SYSTEM

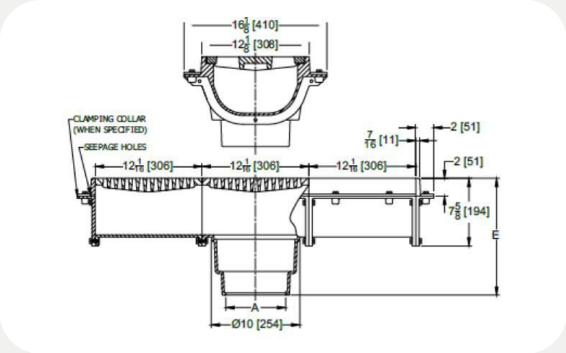

PRODUCT SPECIFICATION: 12” [305mm] Wide Top modular trench drain, Epoxy Coated cast iron drain section with bottom outlet and secondary dome strainer. Both 12" [305mm] long outlet and extension modules are complete with integral seepage pan and loose heavy-duty slotted grate

‘A’ Pipe Size In. [mm]	Approx. Wt. Lbs. [kg]	Grate Open Area in² [cm²]
2, 3, 4 [51, 76, 102]	100 [45]	35 [226]
5, 6 [127, 152]	110 [50]	

PIPE SIZE	OUTLET TYPE		BODY HT (‘E’)
2, 3, 4, 5, 6 [51, 76, 102, 127, 152]	_C	Inside Caulk	13-3/16 [335]
2, 3, 4, 6 [51, 76, 102, 152]	_G	Inside Gasket	13-3/16 [335]
2, 3, 4 [51, 76, 102]	_NL	Neo-Loc	12-1/2 [318

PREFIXES

RC - Cast Iron body Assembly with Cast Iron Grating*
RB - Cast Iron body Assembly with Polished Bronze Top
RN - Cast Iron body Assembly with Polished Nickel Bronze Top

SUFFIXES

- **AR** Acid Resistant Epoxy Coated Cast Iron
- **G** Galvanized Cast Iron
- **VP** Vandal-Proof Secured Top
- **Y** Sediment Bucket