ADJUSTABLE CAST IRON FLOOR CLEANOUT WITH POLISHED NICKEL BRONZE COVER
MODEL NO: **R4106-NC**

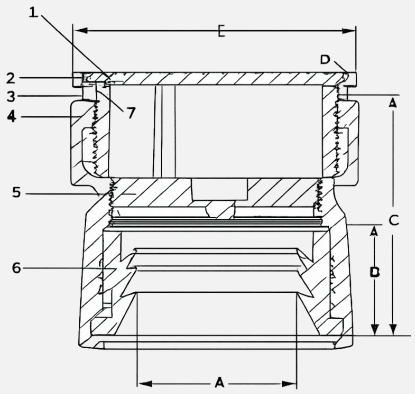

✔ **PRODUCT DECRIPTION: Epoxy Coated Cast Iron Body Adjustable Floor Cleanout, with gas and watertight ABS tapered thread plug and round Polished Nickel Bronze top adjustable to finished floor.**

✔ CRITICAL TO QUALITY (CTQ) DIMENSION :

DIMENSION	DESCRIPTION	DIMENSION IN INCHES {mm}		
		3	4	6
A	PIPE SIZE	3 (73)	4 (103)	6 (152)
B	GASKET HEIGHT	2 (50)	1-3/4 (45)	2-3/16 (55)
C	C.I BODY HEIGHT	4-3/4 (122)	4-3/4 (122)	5-7/8 (149)
D	ADJUSTABLE SIZE	9/16 (14)	9/16 (14)	9/16 (14)
E	DIAMETER	5-1/8 (130)	5-1/8 (130)	8-1/4 (210)
OUTLET TYPE		INSIDE GASKET		

✔ LIST OF COMPONENTS :

COMPONENT	DESCRIPTION
1	POLISHED NICKEL BRONZE FRAME
2	POLISHED NICKEL BRONZE COVER
3	CAST IRON INNER BODY
4	CAST IRON OUTER BODY
5	PLASTIC PLUG- ABS
6	NEO LOC GASKET
7	SS304 CSK Philips M/C-M4 x 6mm

✔ PREFIXES :

NS – Polished Nickel Bronze Adjustable Top
SS – Stainless Steel 304 Adjustable Top

RWSUK LIMITED, Basepoint Centres Limited,
Cressex Business Park, Lincoln Road, High Wycombe, Buckinghamshire, HP12 3RL
for more information, Contact us @rws-uk.com | Phone: +44- 02045723870 | www.rws-uk.com