FLOOR CLEANOUT –NON ADJUSTABLE
MODEL NO: **R4206-CC**

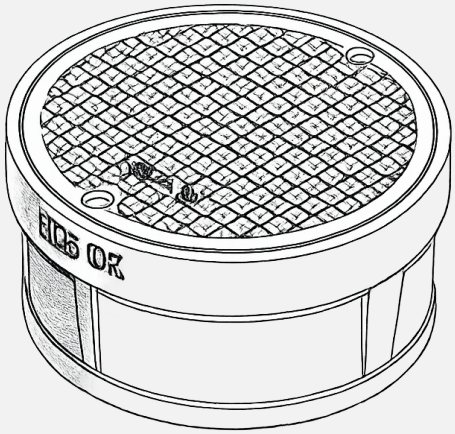

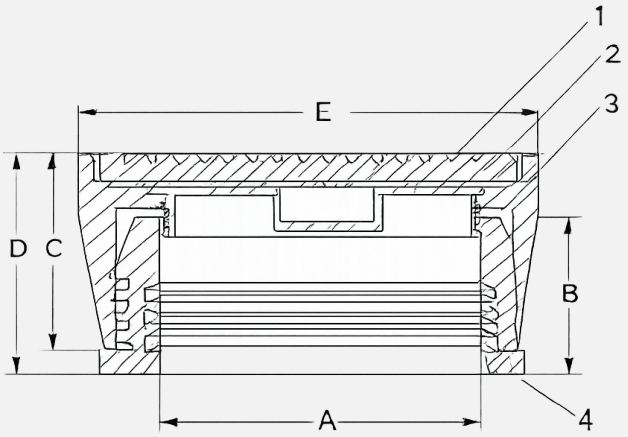

✔ **PRODUCT DECRIPTION: Epoxy Coated Cast Iron Body Non-Adjustable floor cleanout, with gas and watertight ABS tapered thread plug and Round cast iron light duty top cover.**

✔ CRITICAL TO QUALITY (CTQ) DIMENSION :

DIMENSION	DESCRIPTION	DIMENSION IN INCHES {mm}	
		2	**4**
A	PIPE SIZE	2 (49)	4 (103)
B	GASKET HEIGHT	1-3/4 (45)	1-3/4 (45)
C	C.I BODY HEIGHT	2-3/8 (60)	2-3/8 (60)
D	C.I BODY HEIGHT WITH GASKET	2-11/16 (68)	2-11/16 (68)
E	C.I BODY OUTER DIAMETER	3-15/16 (100)	5-7/8 (150)
OUTLET TYPE		INSIDE GASKET	

✔ LIST OF COMPONENTS :

COMPONENT	DESCRIPTION
1	CAST IRON COVER
2	ABS PLASTIC PLUG
3	CAST IRON BODY
4	NEO LOC GASKET

✔ PREFIXES :

CC – Cast iron non adjustable top*
NC – Polished Nickel Bronze non adjustable top